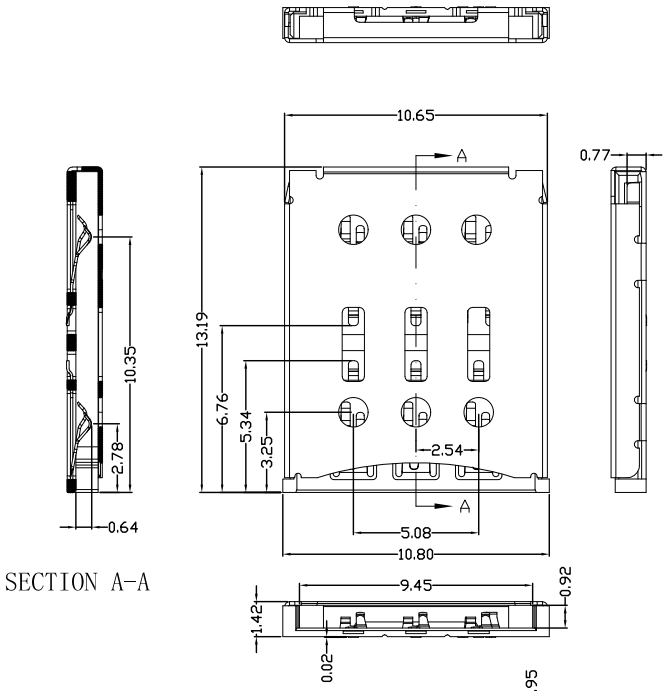

SECTION A-A

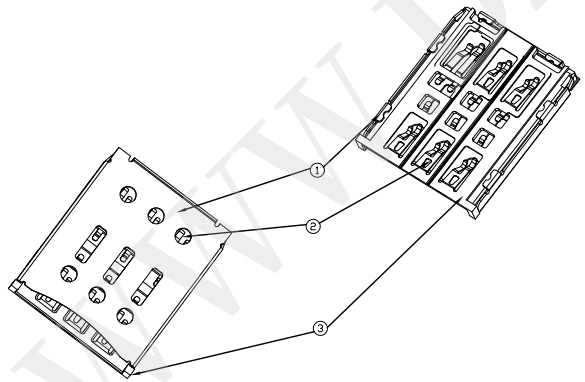

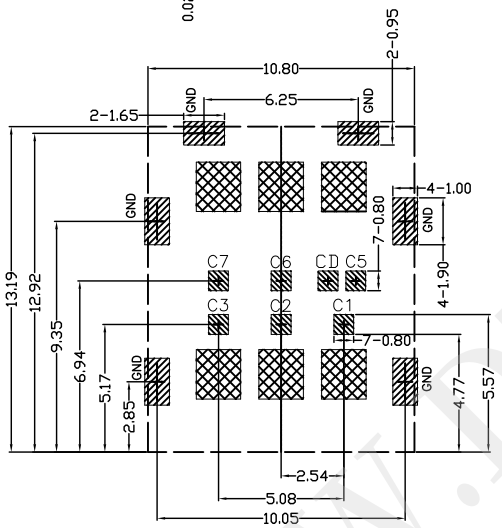

RECOMMENDED PCB LAYOUT (TOLERANCE: ±0.05)

PAD AREA
KEEP AREA
NO PATTERN AND VIA HOLE IN THIS AREA

NANO SIM CARD	
Pin No.	ASSIGNMENT
C1	VCC(SUPPLY VOLTAGE)
C2	RST(RESET SIGNAL)
C3	CLK(COLCK SIGNAL)
CD	Detect Switch
C5	GND
C6	VPP(VARIABLE SUPPLY VOLTAG
C7	I/O(DATA INPUT/OUTPUT)

NOTES :
1 , MATERIAL SEE TABLE
2, ELECTRICAL PERFORMANCES :
2.1, CURRENT RATING :0.5A Max;
2.2, VOLTAGE RATING :30 V AC;
2.3, INSULATION RESISTANCE :100 MIGA OHMES MIN;
2.4, DIELECTRIC WITHSTANDING VOLTAGE:250V AC FOR 1 MINUTE;
2.5, CONTACT RESISTANCE :40 MILLT OHMS MAX ;
3, MECHANICAL PERORMANCES :
3.1, CONTACT NORMAL FORCE :0.3N MIN. AT WORKING DEFLECTION;
3.2, DUABILITY :5000 CYCLES;
3.3, OPERATING TEMPERATURE :-40° C TO +85° C;

NO	DESCRIPTION	QTY	MATERIAL	PLATING &COLOR
3	INSERT MOLDING	1	LCP UL94-V0	BLACK
2	CONTACT	6	COPPER ALLOY T=0.10	Au PLATED 1u"
1	SHELL	1	STAINLESS STELL T=0.15	Au PLATED 1u"

深圳市华宇创精密电子有限公司

TOLERANCE: X.X ±0.30, X.XX ±0.25, X.XXX ±0.15, X.° ±2°, X.X° ±0.5°	DRAWED BY : 陈一鸣	DATE : 2014-02-23	PART NAME: NANO SIM CARD 内焊1.40H 7PIN 侧插卡托式
	CHECKED BY: 马跃	DATE : 2014-02-23	PART NO. HYC294-SIM07-140
UNIT: mm [inch]	APPROVED BY: 邱敏	DATE : 2014-02-23	MOLD NO.
SCALE:1:1 SIZE: A4			DRAW NO: HYC-2110271002
			SHEET NO. 1 OF 1

WWW.DZYJZJ.COM

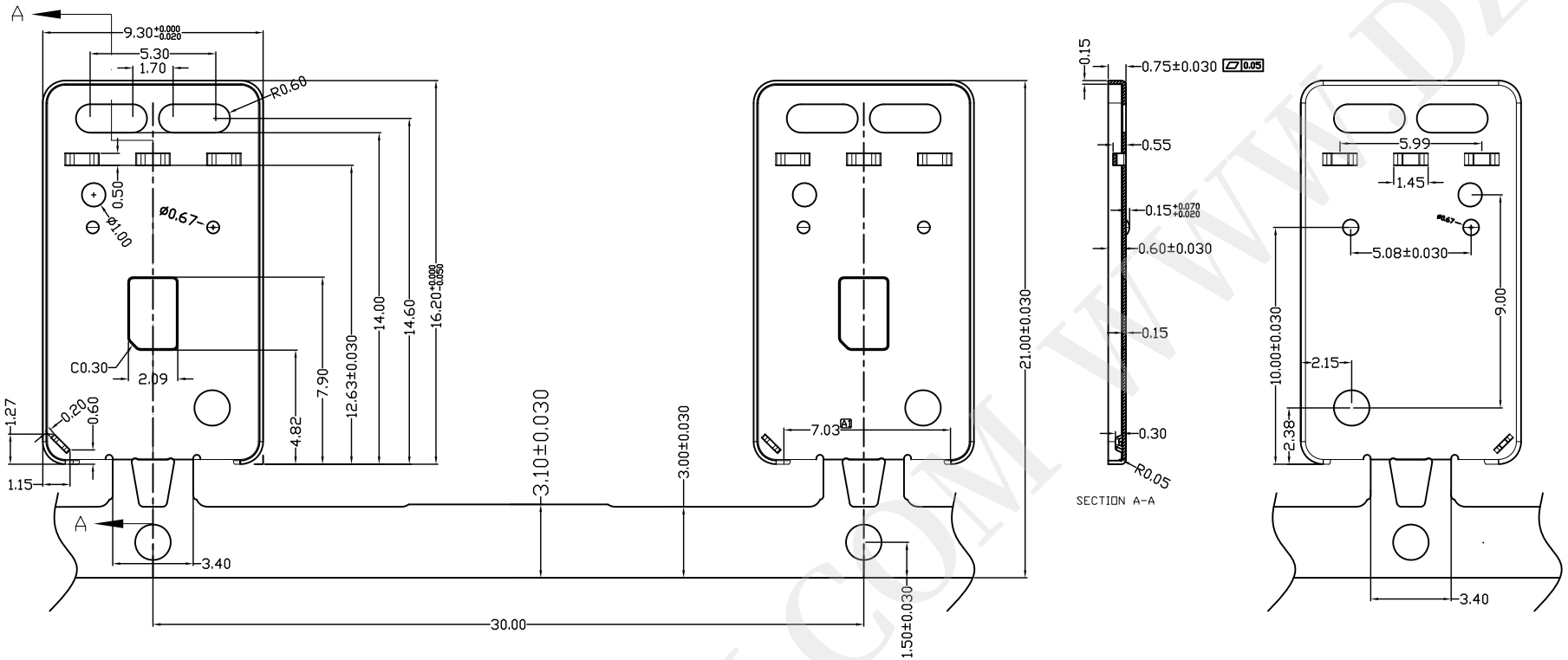

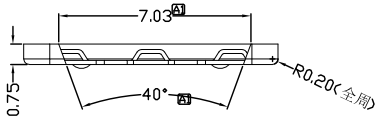

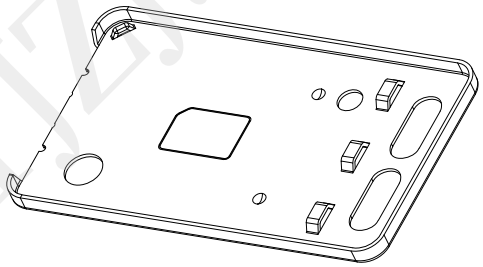

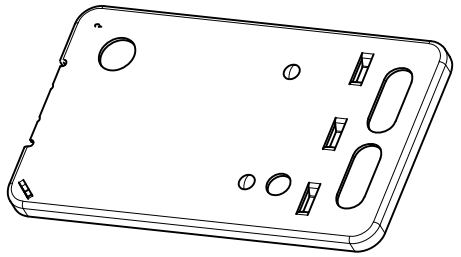

产品要求:

1. 材料：SUS304-1/2H T=0.15mm
2. 产品不可有变形等不良,毛刺不可以＞0.03mm
3. 详细数据以三维档为准。
4. 未注尺寸公差请参考图框一般公差标准

深圳市华宇创精密电子有限公司				
TOLERANCE: X.X ±0.30 X.XX ±0.25 X.XXX ±0.15 X.° ±2° X.X° ±0.5°	DRAWED BY : 陈一鸣	DATE : 2014-02-23	PART NAME: 卡托	
	CHECKED BY: 马跃	DATE : 2014-02-23	PART NO.	HYC-018
			MOLD NO.	
UNIT: mm [inch]	APPROVED BY: 邱敏	DATE : 2014-02-23	DRAW NO:	HYC-2110271002
SCALE:1:1 SIZE: A4			SHEET NO.	1 OF 1

WWW.DZYJZJ.COM